1

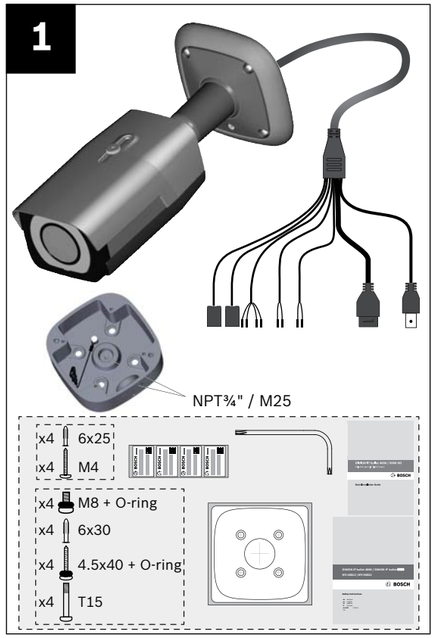

2

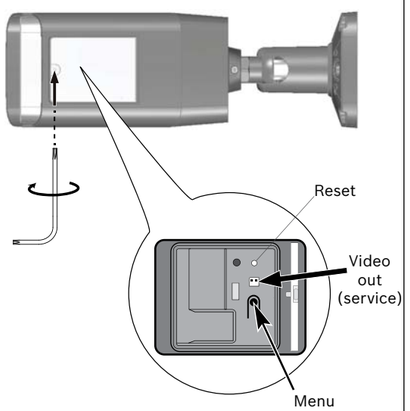

3

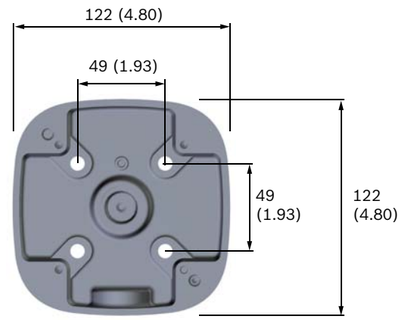

mm (in)

4

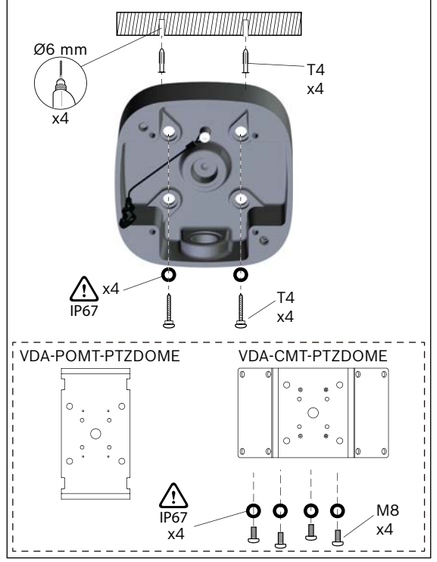

5

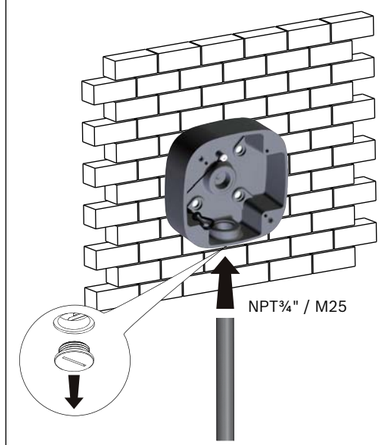

6

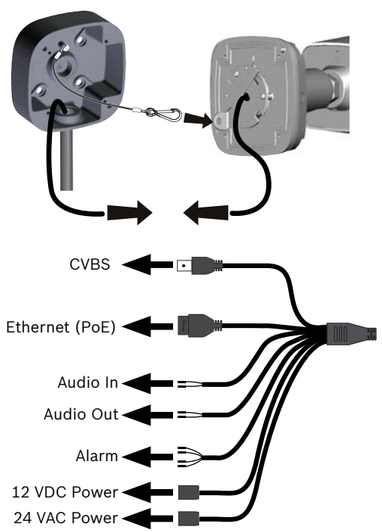

7 Ethernet (PoE)

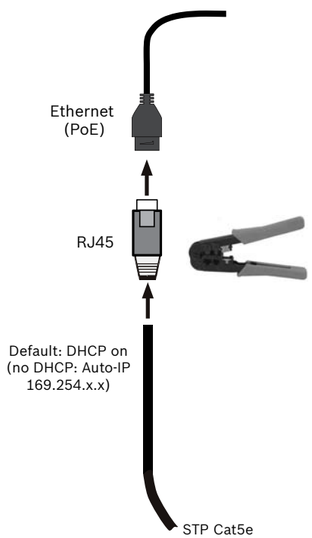

8 ~~PoE~~

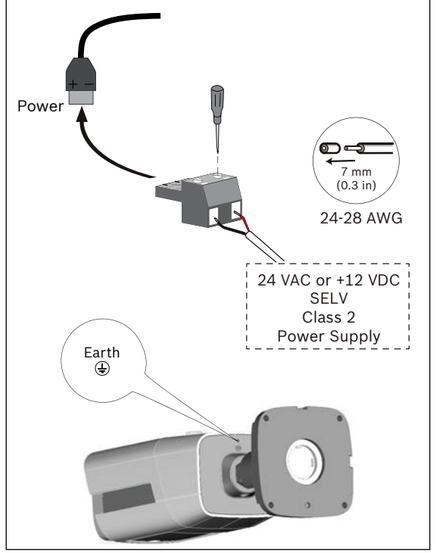

9

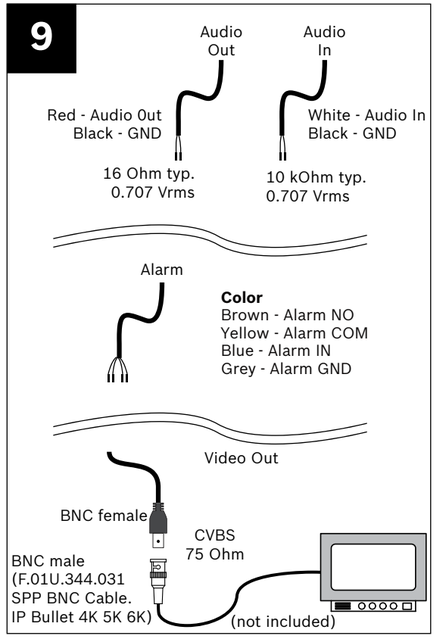

10

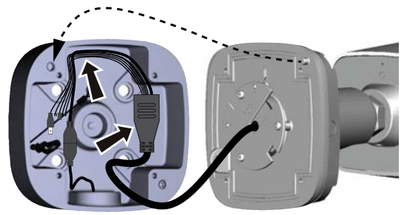

11

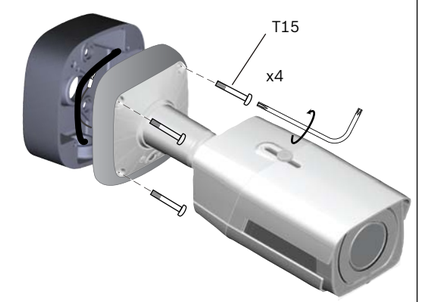

12

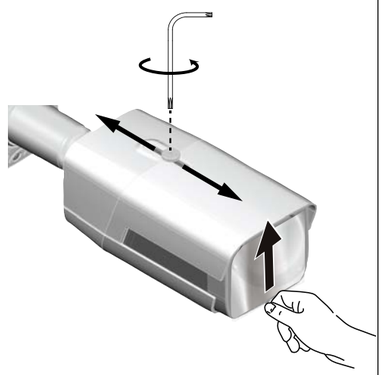

13

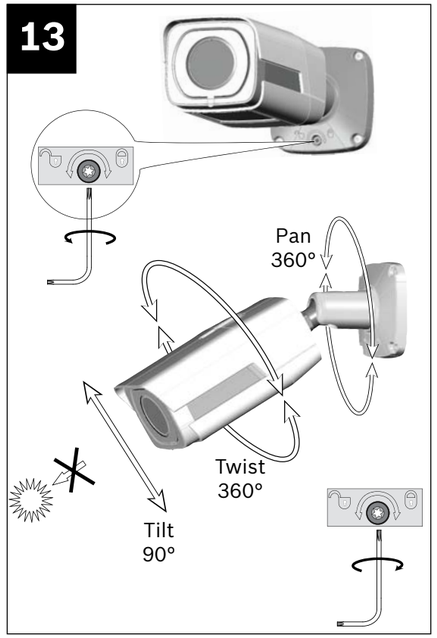

14

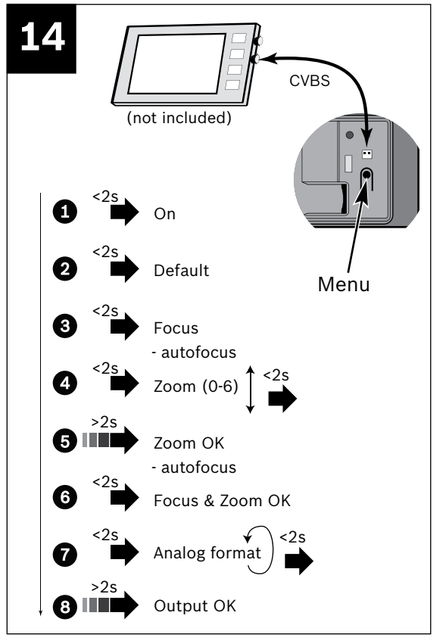

1 IPHelper

http://downloadstore.boschsecurity.com/

Download >> Install

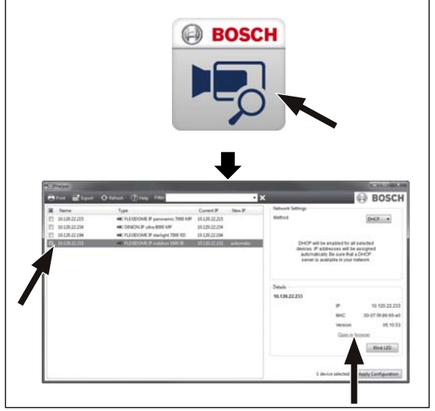

2 Lens Wizard

Configuration >> Camera >> Installer Menu

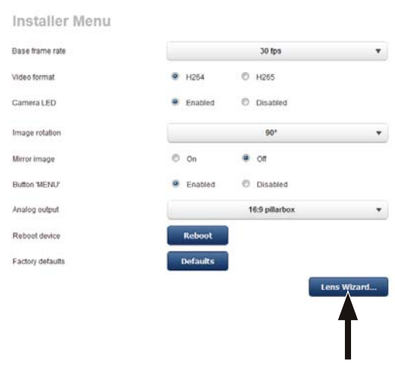

3 Zoom & Focus

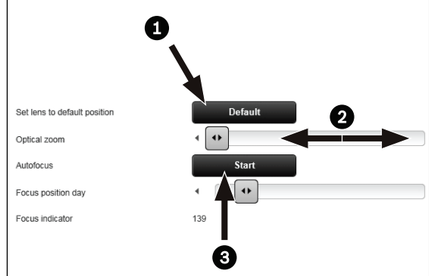

4 View & Configure

http://downloadstore.boschsecurity.com/

Bosch Video Client

Video Security Client

Configuration Manager

DINION IP 4000i IR

NBE-4502-ALAR

BOSCH

Quick Installation Guide

Bosch Security Systems B.V.
Torenallee 49
5617 BA Eindhoven
The Netherlands
www.boschsecurity.com
© Bosch Security Systems B.V., 2018

AM18-Q0724 | 2018.05 | v1.1