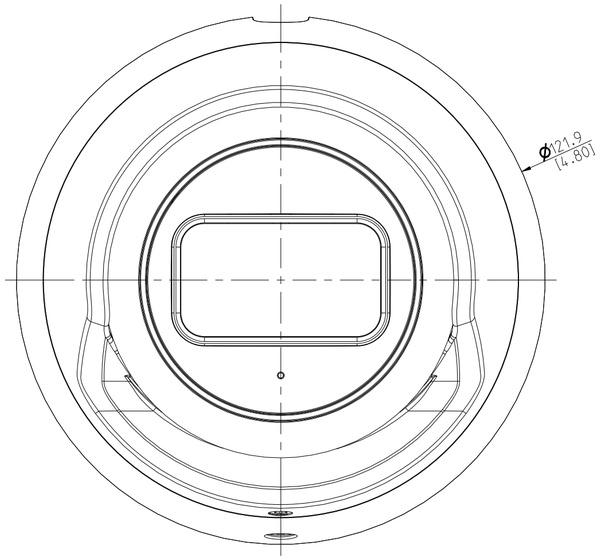


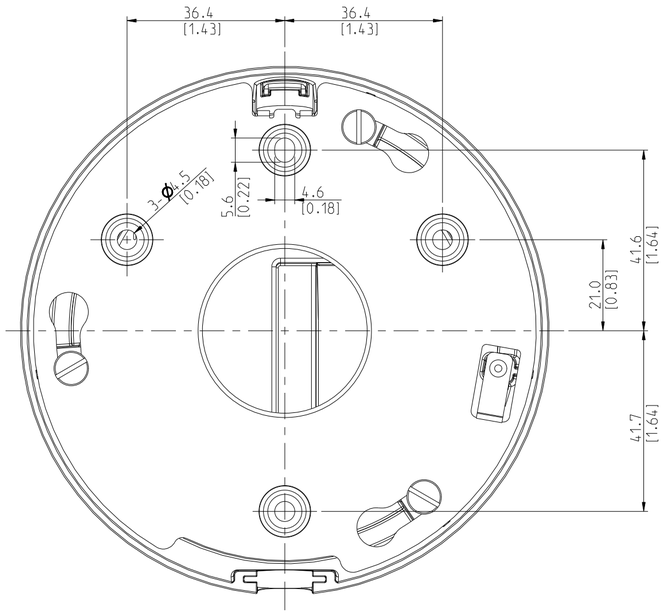


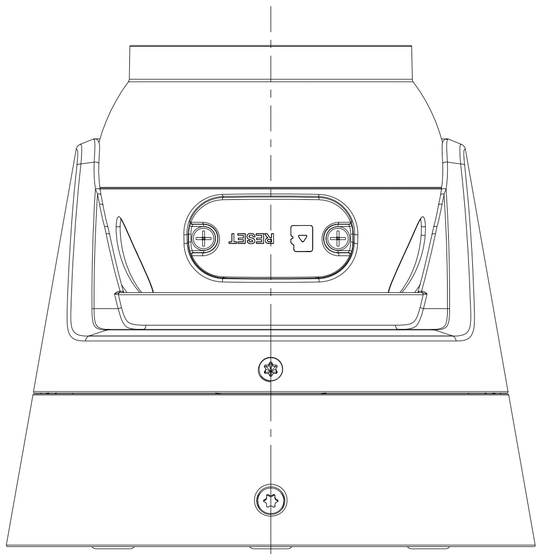


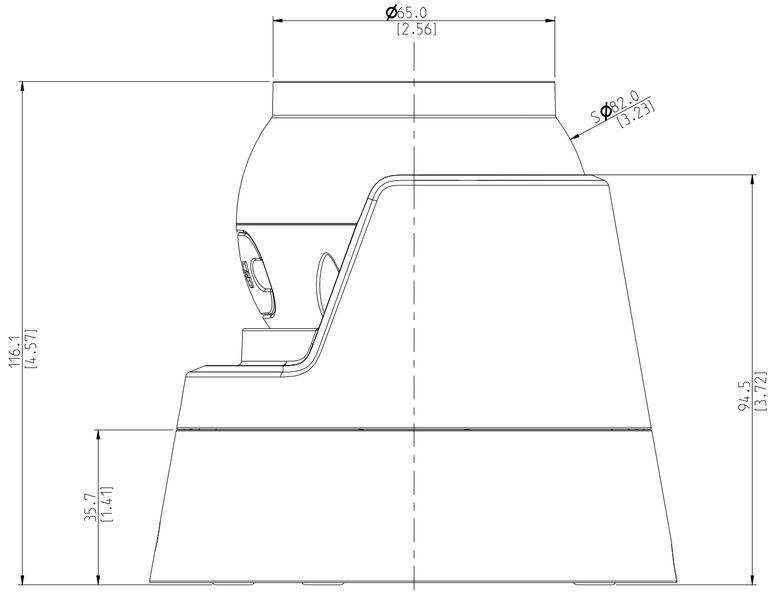


© Robert Bosch GmbH. All rights reserved, also regarding
any disposal-, exploitation, reproduction, editing, distribution,
as well as in the event of applications for industrial property rights.

© Robert Bosch GmbH. Alle Rechte vorbehalten, auch bzgl.
jeder Verfuegung, Verwertung, Reproduktion, Bearbeitung,
Weitergabe sowie fuer den Fall von Schutzrechtsanmeldungen.

| Ind. | Change/Aend. | YYYYMMDD | Drawn/Gez. | Checked/Gepr. | Releas./Freig. | BWN | Resp. dept./Verantw. Abt. | Add. info./Zus. Info. |
|---|---|---|---|---|---|---|---|---|
| | | | | | | | | |
| | | | | | | | | |
| | | | | | | | | |
| | | | | | | | | |

| | | | | |
|---|---|---|---|---|
| Treatment/ Behandlung -- -- | | | Missed details/Fehlende Angaben -- | Size/Gst. |
| Mat./Stoff -- | | | From/Aus -- | |
| Lang./Spr. en/de | | Wght./Gew. -- | BOSCH | Sheet/Bl. 1/1 |
| | Crit. P. -- | Scale/M.stab 1:1 | Doc.type Turret Outline | DP/TD / Ind. / Format A2 |
| MNR | | Mat.meets/Stoffe s N2580-1 | Syst. PE | Repl. for / Repl. by |

3007