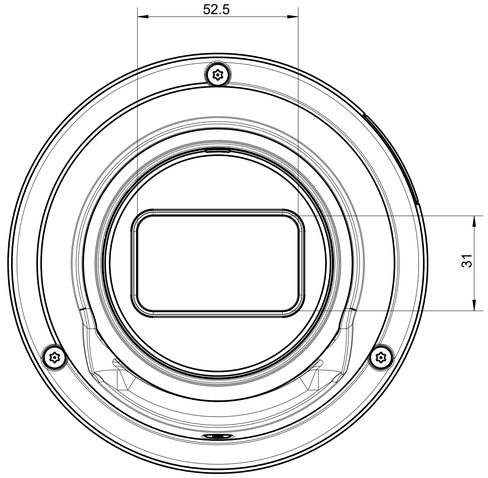


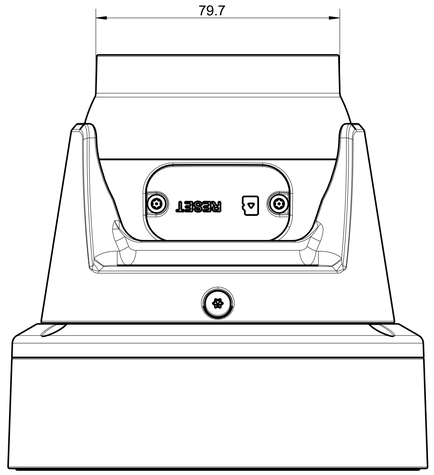


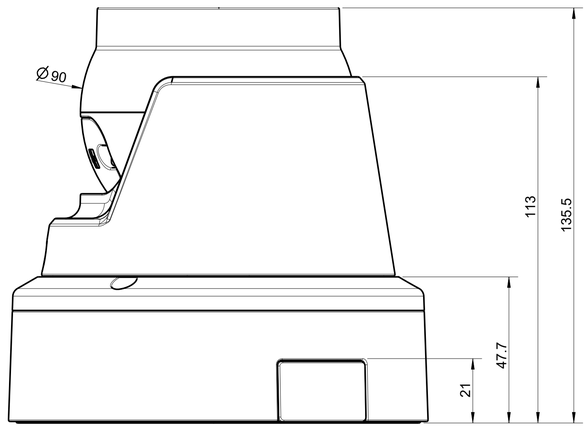


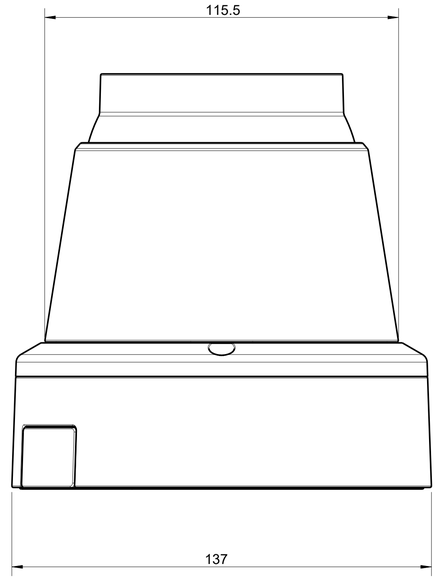


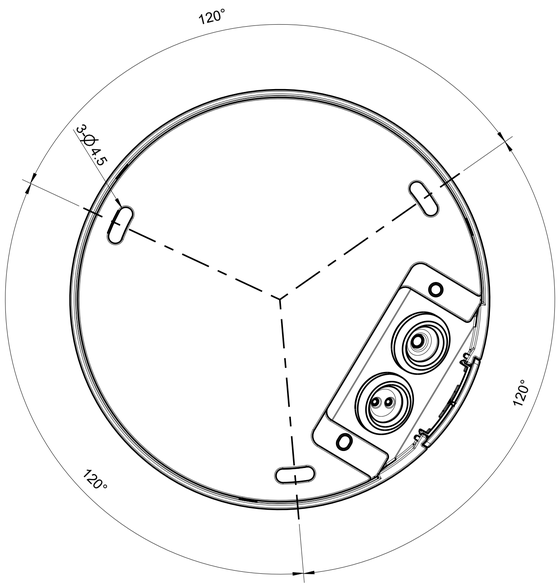


| | | | | | | | | |
|---|---|---|---|---|---|---|---|---|
| Ind. | Change/Aend. | YYYYMMDD | Drawn/Gez. | Checked/Gepr. | Releas./Freig. | BWN | Resp. dept./Verantw. Abt. | Add. info./Zus. Info. |
| Treatment/ Behandlung | | | | | | | Missed details/Fehlende Angaben | Size/Gst. |
| Mat./Stoff | | | | | | | From/Aus | |
| Lang./Spr. | | Wght./Gew. | BOSCH | OUTLINE_FLEXIDOME IP turret 3000i IR - outdoor | | | | Sheet/Bl. 1/1 |
| | Crit. P. | Scale/M.stab | | Doc.type | | | DP/TD | Ind. | Format A1 |
| | | | Mat.meets/Stoffe s | Syst. PE | | | | |
| MNR. | | | | Repl. for | | | Repl. by | |

© Robert Bosch GmbH. Alle Rechte vorbehalten, auch bzgl. jeder Verfügung, Verwertung, Reproduktion, Bearbeitung, Weitergabe sowie für den Fall von Schutzrechtsanmeldungen.

© Robert Bosch GmbH. All rights reserved, also regarding any disposal, exploitation, reproduction, editing, distribution, as well as in the event of applications for industrial property rights.